Nexus Seals

Working With People to Engineer Solutions

S8-1/S109

Multiple Spring Seal

Materials

Rotary - SiC / SSiC / Cer

Elastomer S8-1 - NBR / EPDM / Viton / Aflas / FFKM

S109 - PTFE

Working Conditions

Pressure ≤ 24 bar

Speed ≤ 25 m/s

Temperature S8-1 up to 205°C

S109 up to 260°C

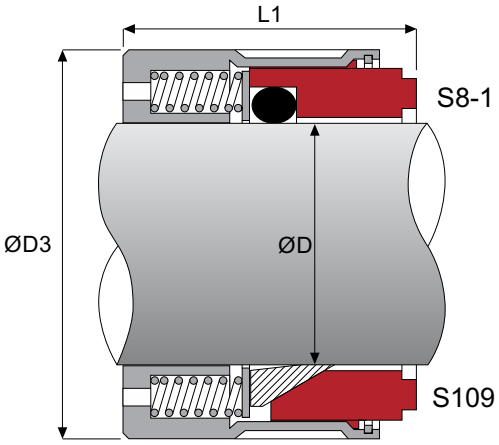

Shaft Ø		ØD3	L1
Inches	Metric		
15.8		30.7	19.0
19.1		34.7	22.2
	20	34.8	24.0
	22	35.6	24.0
22.2		38.0	23.8
	24	38.8	25.0
	25	39.8	25.0
25.4		40.5	25.4
	28	43.4	27.0
28.6		43.5	27.0
	30	46.4	27.0
31.7		48.3	27.0
	32	49.7	29.0
34.9		52.0	28.6
	35	51.3	29.0
	38	54.5	29.0
38.1		55.6	28.6
	40	59.6	35.0
41.2		61.0	35.0
44.4		64.3	35.0
	45	64.0	35.0
47.6		65.1	35.0
	48	64.7	35.0
	50	67.2	35.0
50.8		69.7	35.0
53.9		77.0	43.0

Shaft Ø		ØD3	L1
Inches	Metric		
	55	69.6	43
57.1		79.9	43
	60	77.7	43
60.3		83.1	43
63.5		86.6	43
	65	82.7	43
66.6		89.6	43
69.8		92.8	43
	70	87.7	43
73		95.5	43
	73	92.6	43
	75	96.3	43
76.2		97.7	43
79.4		100.5	43
	80	101.1	43
82.5		105.3	43
	85	107.7	43
85.7		108.3	43
88.9		111.5	43
	90	112.7	43
92.1		114.9	43
	95	117.7	43
95.3		118	43
98.4		121.2	43
	10	122.7	43
101.6		124.6	43