Nexus Seals

Working With People to Engineer Solutions

S8-1B/S109B

Multiple Spring Seal

Materials

Stationary	- Car / SiC / SSiC
Rotary	- SiC / SSiC / TC / Cer
Elastomer S8B1	- NBR / EPDM / Viton / Aflas / PTFE / FFKM
Elastomer S109B	- PTFE

Working Conditions

Pressure	≤ 83 bar - S8B1
	≤ 52 bar - S109B
Speed	≤ 25 m/s
Temperature up to 205°C	

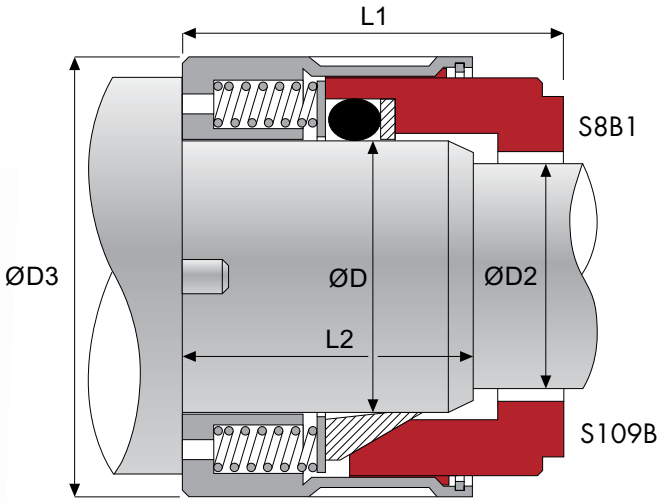

Inches	Shaft ØD	ØD2	ØD3	L1	L2
0.625	15.8	12.7	30.7	27.0	22.2
0.750	19.1	15.8	34.7	30.0	25.2
0.875	22.2	19.1	38.0	32.0	25.6
1.000	25.4	22.2	40.5	33.0	26.6
1.125	28.6	25.4	43.5	35.0	27.1
1.250	31.7	28.6	48.3	35.0	27.1
1.375	34.9	28.6	52.0	37.0	28.3
1.500	38.1	31.8	55.6	37.0	28.3
1.625	41.2	34.9	61.0	45.0	36.3
1.750	44.4	38.1	64.6	45.0	35.5
1.875	47.6	41.3	67.3	45.0	35.5
2.000	50.8	44.5	70.7	45.0	35.5
2.125	53.9	47.6	77.0	52.0	40.9
2.250	57.1	50.8	79.9	52.0	40.9
2.375	60.3	54.0	83.1	52.0	40.9
2.500	63.5	57.2	86.6	52.0	40.9
2.625	66.6	60.3	89.6	52.0	40.9
2.750	69.8	63.5	92.8	52.0	40.9
2.875	73.0	66.7	96.0	52.0	40.9
3.000	76.2	69.9	97.7	52.0	40.9
3.125	79.4	73.0	100.5	52.0	40.9
3.250	82.5	76.2	105.3	52.0	37.7
3.375	85.7	79.4	108.3	52.0	37.7
3.500	88.9	82.6	111.5	52.0	37.7
3.625	92.1	85.7	114.9	52.0	37.7
3.750	95.3	88.9	118.0	52.0	37.7
3.875	98.4	92.1	121.2	52.0	37.7
4.000	101.6	95.3	124.6	52.0	37.7